1985SV 3" Sequential Vapor Vent

Replacement Parts

Rev. 0, January 2003

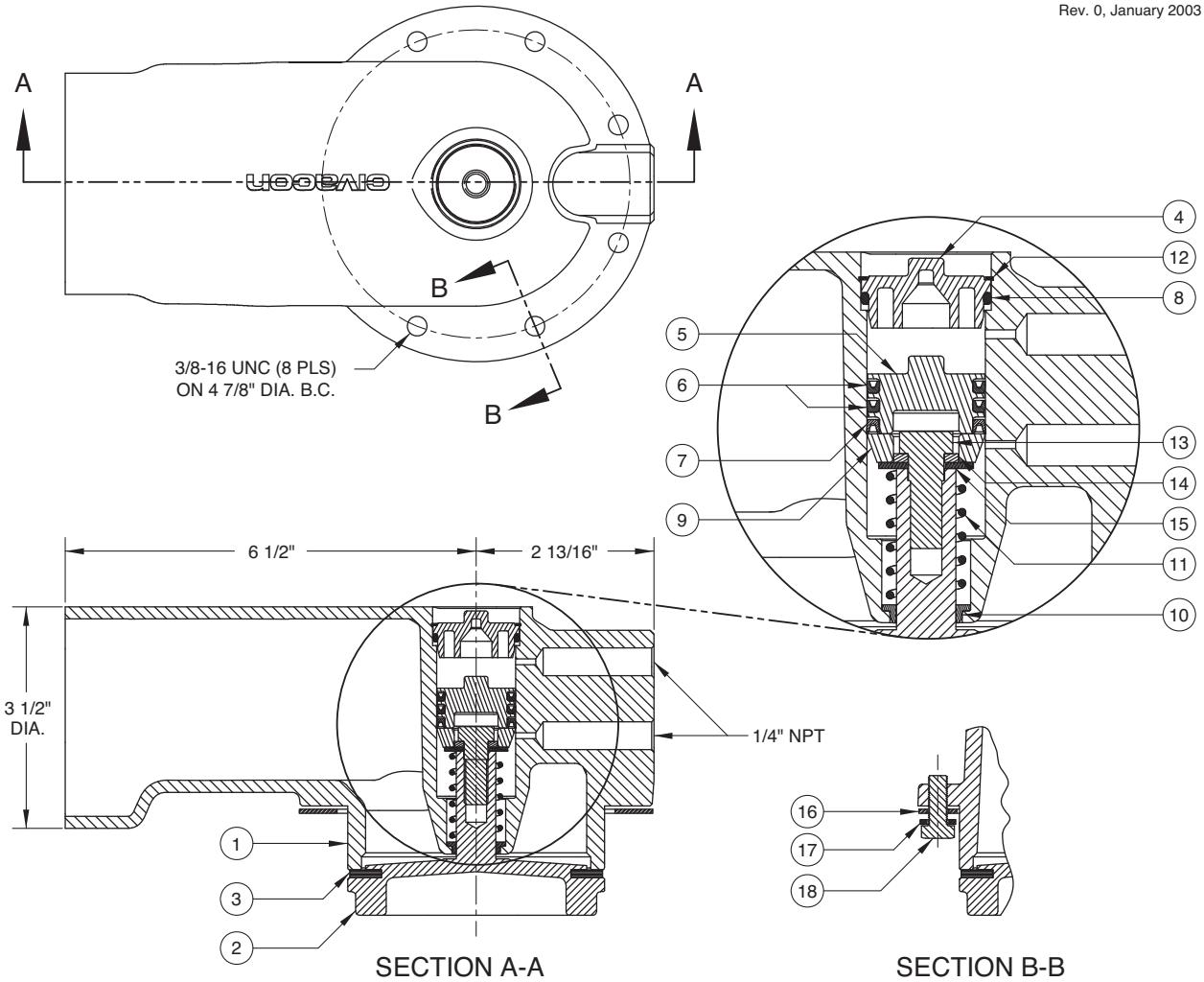

ITEM	PART NUMBER	DESCRIPTION	QTY.
1	E52313A	BODY	1
2	C10010A	POPPET	1
3	H20750M	SEAT DISC (VITON) [1]	1
4	H20516M	PLUG [1]	1
5	C52147RP	PISTON [1]	1
6	H20639M	SEAL (BUNA U-CUP) [1]	2
7	H20206M	SEAL RING (TEFLON)	1
8	H20249M	O-RING (BUNA) [1]	1
9	H52172RP	DISC (ACETAL) [1]	1
10	H20517M	BEARING	1
11	H52179M	SPRING	1

ITEM	PART NUMBER	DESCRIPTION	QTY.
12	H20066M	RETAINING RING	1
13	H20070M	CAP SCREW	1
14	H04467M	WASHER (LOCKING)	1
15	H05487M	WASHER (FLAT)	1
16	C10011M	FLANGE GASKET	1
17	H20074M	SEAL WASHER	8
18	H20518M	CAP SCREW	8

REPAIR KITS		
PART NUMBER	DESCRIPTION	QTY.
1985SVRK	VENT REPAIR KIT	N/A

1 - Included in 1985SVRK

civacon™
PHONE: (816) 741-6600 • (888) 526-5657 • Fax: (816) 741-1061
4304 Mattox Road • Kansas City, MO 64150 • **www.civacon.com**